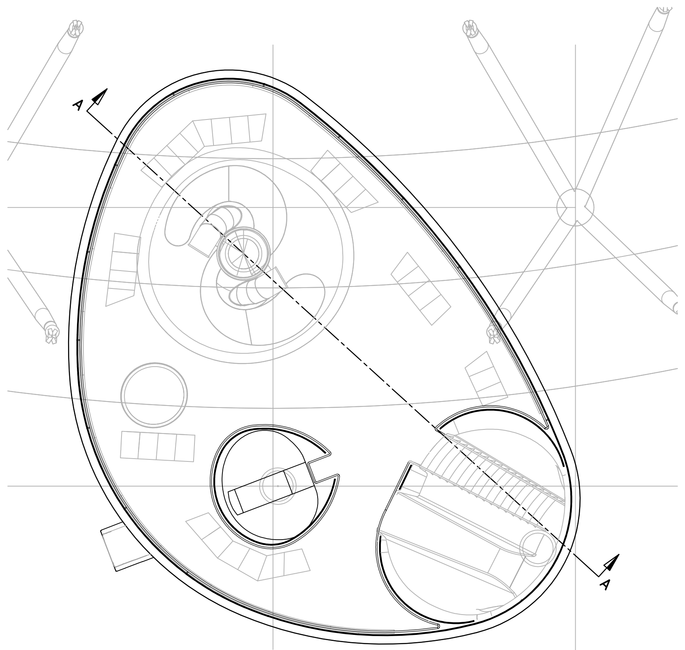

plan view – main layout
scale 1:100

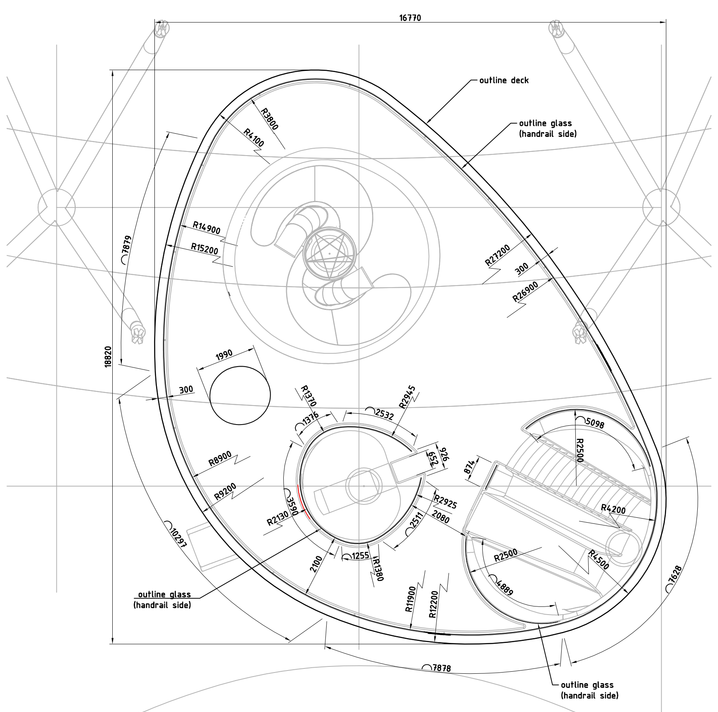

plan view – main dimensions – deck outline & glass
scale 1:100

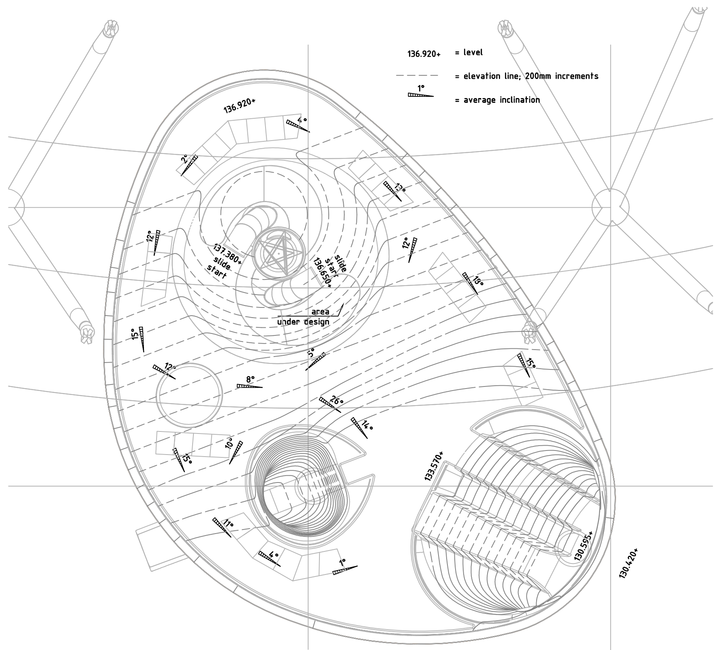

plan view – deck levels and inclination
scale 1:100

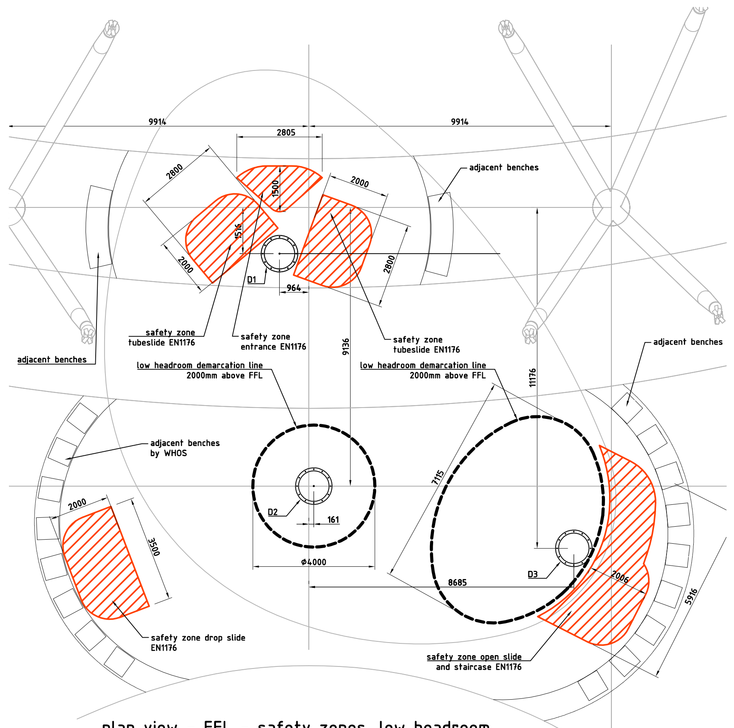

plan view – FFL – safety zones, low headroom
clearance demarcation line and baseplate positions
scale 1:100

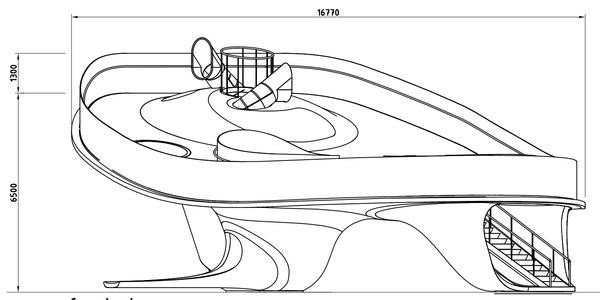

front view
scale 1:100

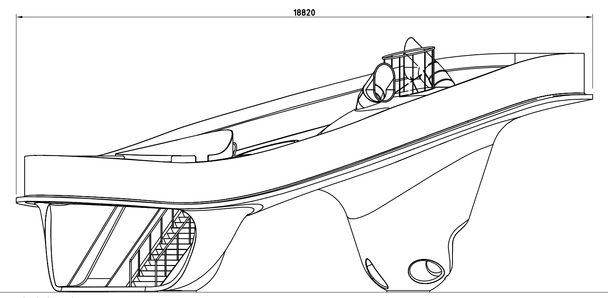

right view
scale 1:100

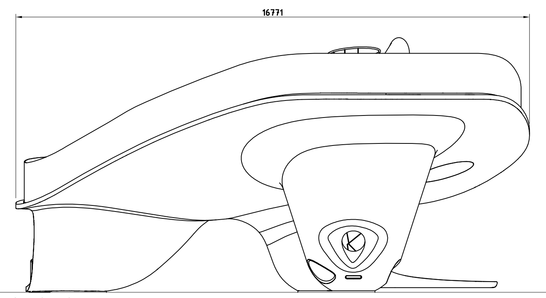

back view
scale 1:100

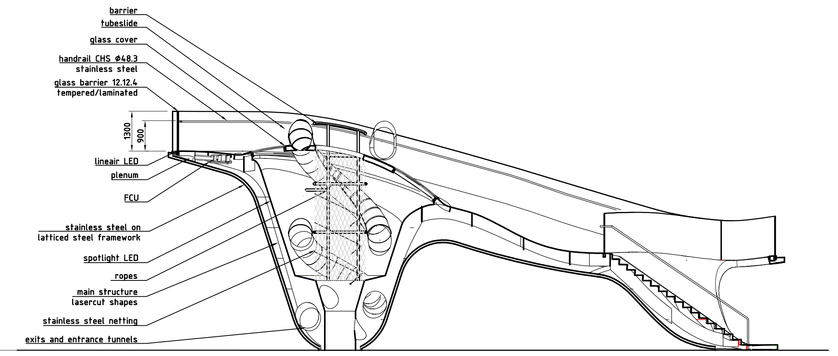

section A–A
scale 1:100

Z:\2019\19.108_BERLI_CHARGE AIRPORT\04 BESTEK\CAD\BESTEKTEKENINGEN\DWG\1 SHOPDRAWINGS\1 FOR PRESENTATIONS\AL_C_PRL_ARC_00_ATT_SD_0001_1 - PLAN VIEWS AND ELEVATIONS.DWG